VIPSKILLS

Erasmus+

Project Energy Efficiency in HVAC Air Systems

Contact

VIPSKILLS Project Coordinator:

vipskills[at]pb.edu.pl

Virtual and Intensive Course Developing Practical Skills of Future Engineers

VIPSKILLS

Erasmus+ 2016-1-PL01-KA203-026152

Virtual and Intensive Course Developing

Practical Skills of Future Engineers

www.vipskills.pb.edu.pl

Contents

3.0 Case study house 1: house "B" roof 2

Case study: house1 in Cordoba (file house1.dwg)

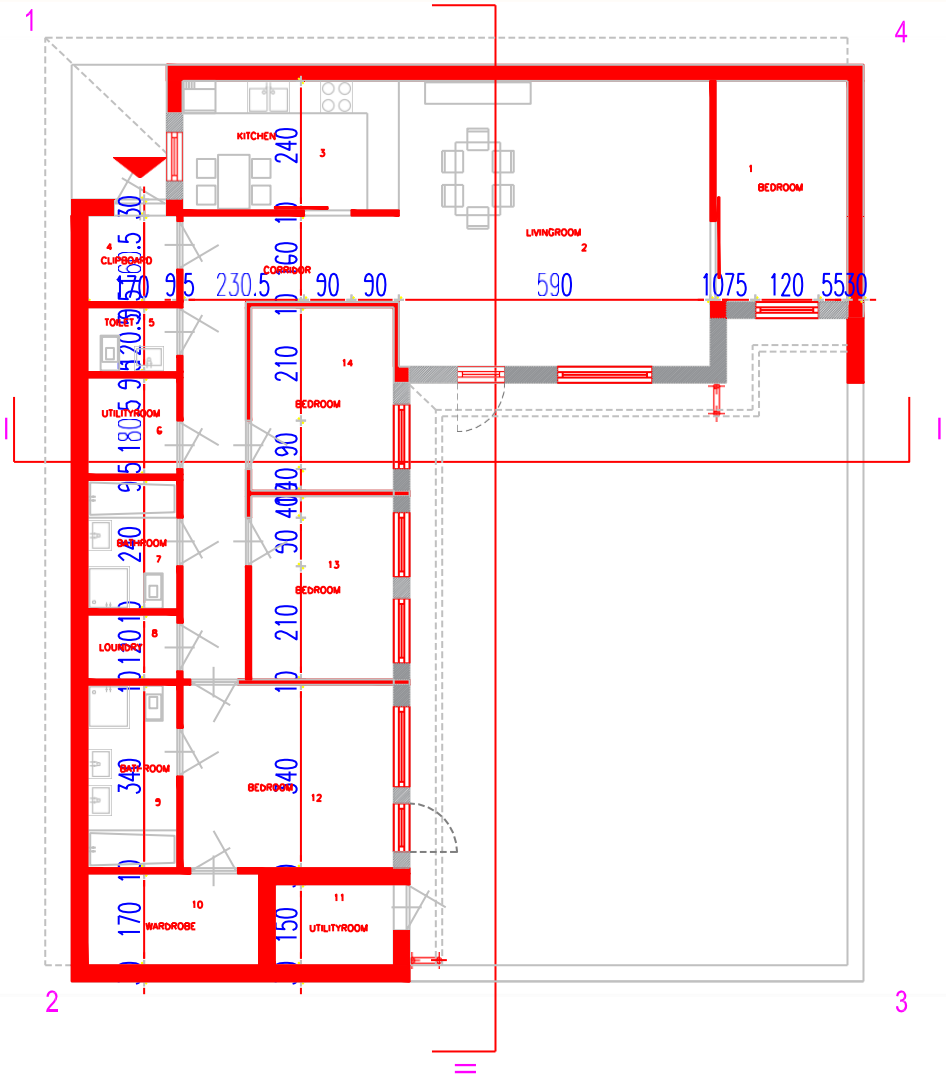

Case study: house1 in Cordoba (file vipskills_house1.ctehexml)

- To be explained in HULC software

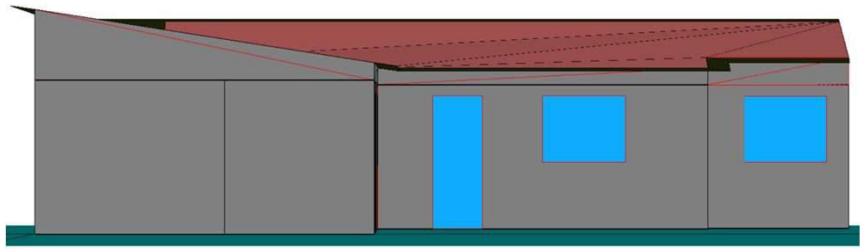

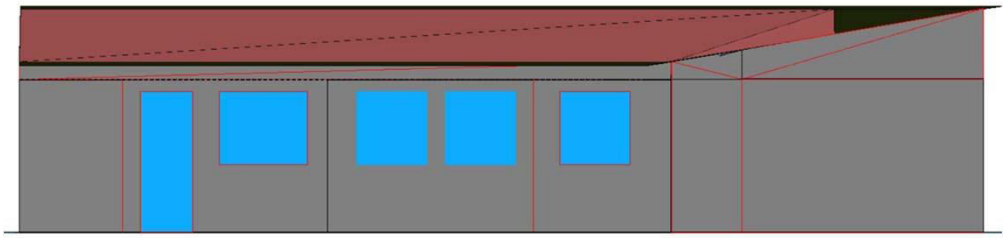

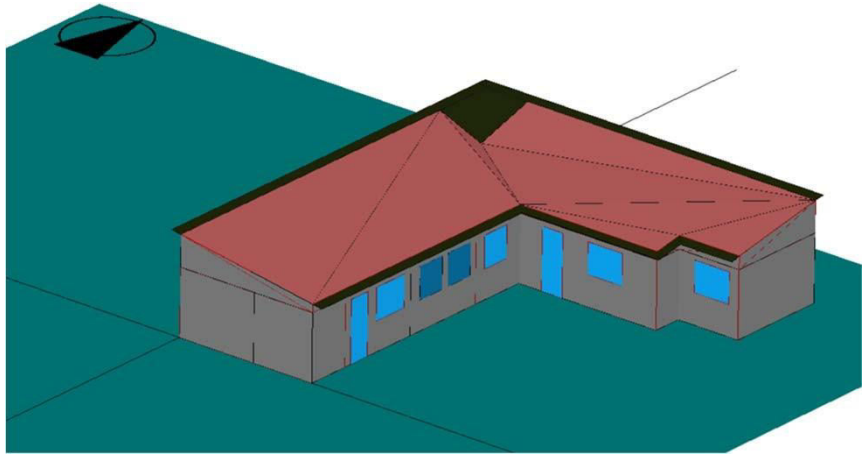

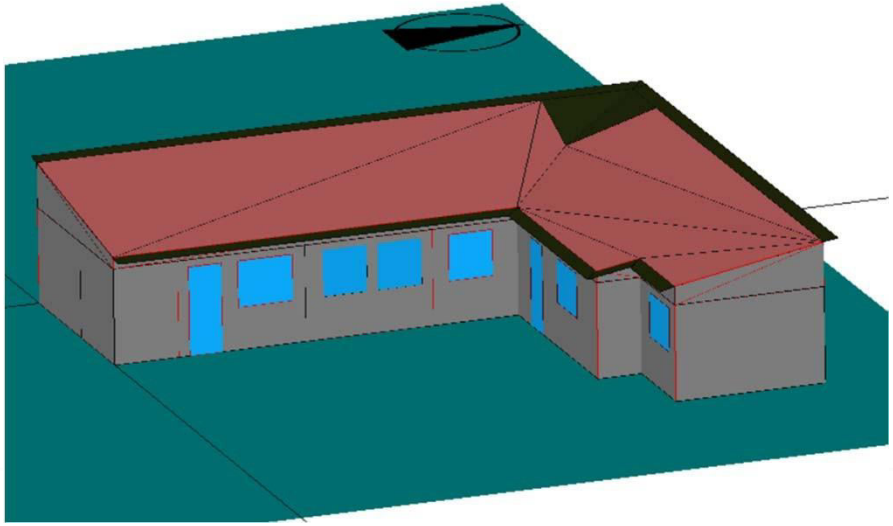

3.1 Objectives

3.1. Objectives

- The student has to apply skills and competences related to Energy Efficiency in Residential Houses:
- Three main **objectives** are proposed:
  - Analyze energy efficiency of HVAC air systems.
  - Calculate primary Energy Consumption of different HVAC air systems in residential house, both for heating and cooling.
  - Estimate CO_2 emissions related with different HVAC air systems in a residential house.

3.2 Methodology

Methodology

- Analyze the geometrical and constructive characteristics of the proposed residential house.
- Identify zones of the residential house to be heated or cooled.
- Analyze the climatic zone where the residential house is located.
- Analyze different HVAC air systems commercially available. Select the at least three different systems for a residential house.
- Model the selected HVAC air systems in an energy simulation tool (HULC) and simulate the HVAC air system in an annual base.
- Analyze the annual results in terms of energy demand, primary energy consumption and CO2 emissions.
- Apply energy efficiency strategies to reduce energy consumption and CO2 associated emissions.
- Simulate optimized HVAC air systems solutions.
- Analyze and compare the energy results to select the best HVAC air system option.

Workflow to simulate HVAC systems

1. Analysis of cooling/heating/DHW systems and equipment
2. Technical data: power, water/air flow rates, temperatures, efficiency
3. Define the building: geometry and materials (given)
4. Activate "VYP option"
5. Define DWH system; define DHW demand; define DHW equipments
6. Define HVAC systems and equipments
7. Check correction factors
8. Calculate energy consumption using "CTE HE-0" button
9. Calculate the energy label
10. Print the report
11. Anotate the numerical results: energy demand, energy consumption and CO_2 emissions

Case study: house1 in Cordoba

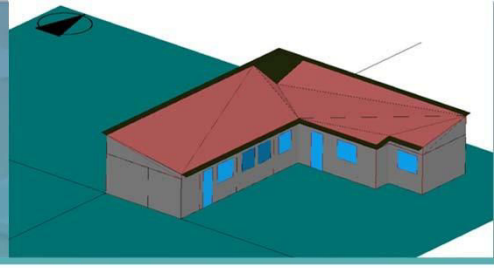

Room	Hulc	HVAC system
Bedroom 1	P1E2	YES
Living room 2	P1E15	YES
Kitchen 3	P1E12	YES
Bedroom 12	P1E6	YES
Bedroom 13	P1E13	YES
Bedroom 14	P1E14	YES

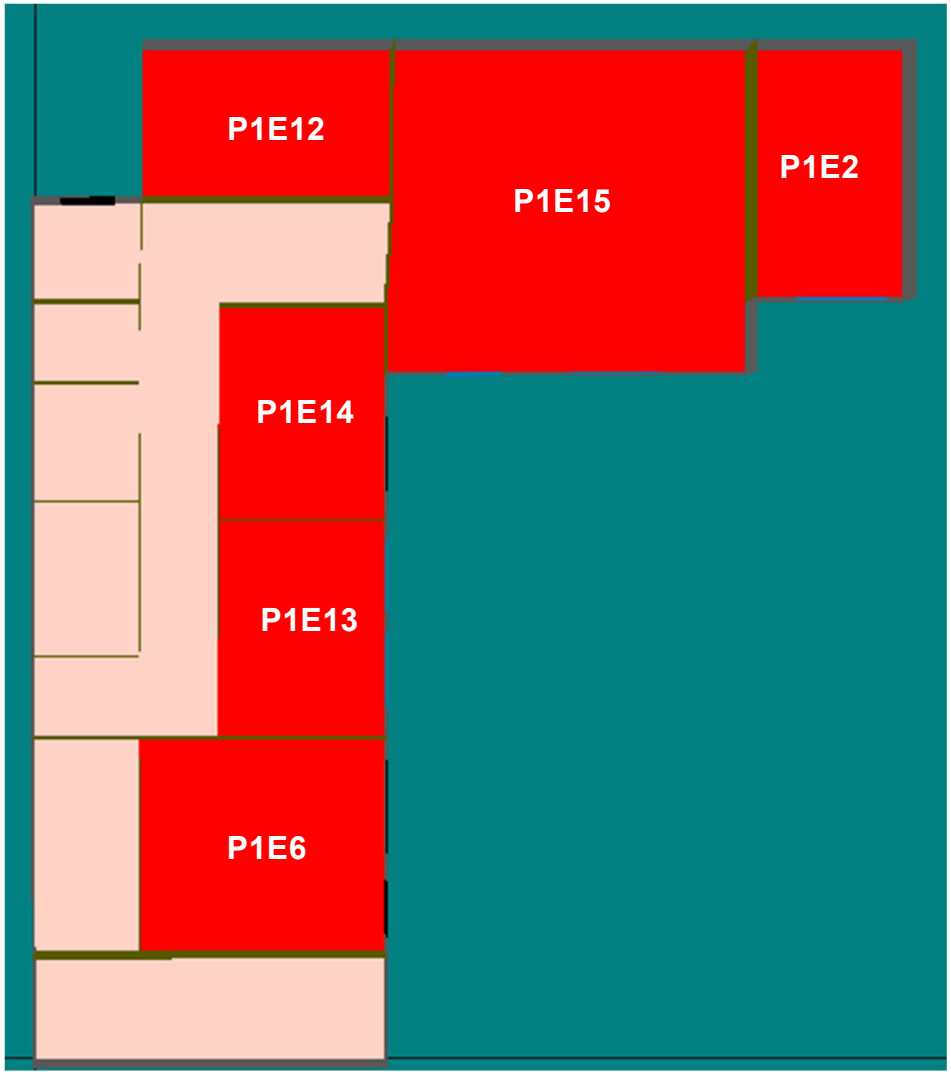

3.3 HVAC system1 for house1

3.3.1. HVAC system 1. Identify zones to be heated/cooled

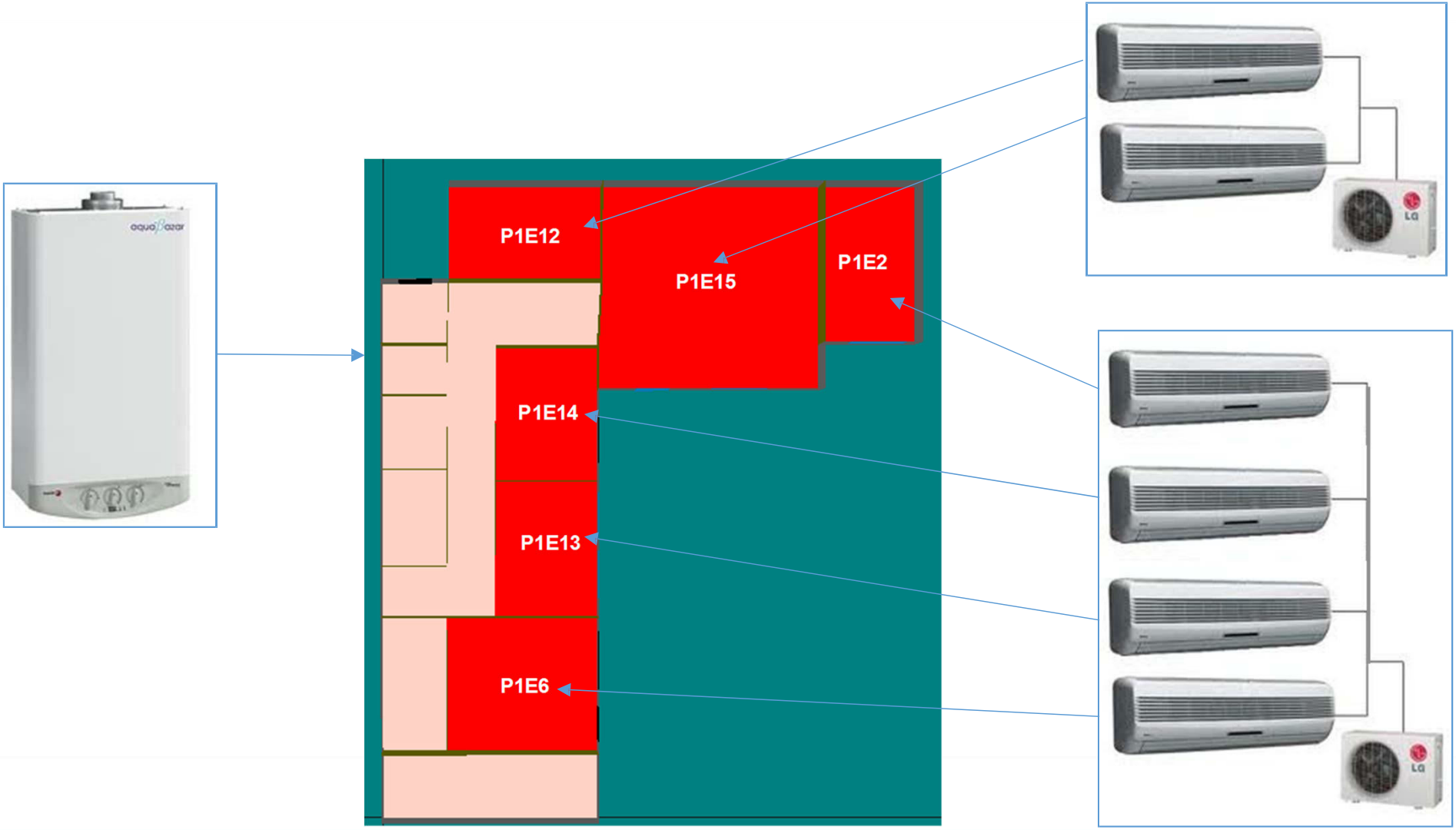

3.3.1. HVAC system 1. Description

- DWH: Boiler (natural gas)

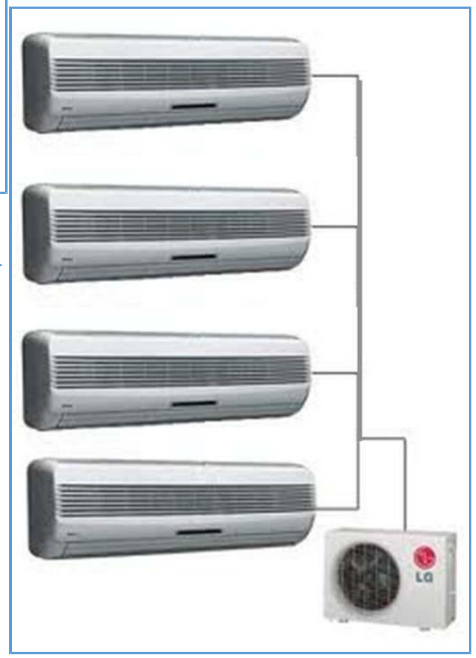

- HVAC Multisplit1 heating/cooling:
  - *P1E2*: bedroom 1
  - *P1E6*: bedroom 12
  - P1E13: bedroom 13
  - P1E14: bedroom 14

- HVAC Multisplit2 heating/cooling:
  - P1E15: living room2
  - P1E12: kitchen3

3.3.2. HVAC system 1. Topology of DWH system

- Step 1. Define DWH system

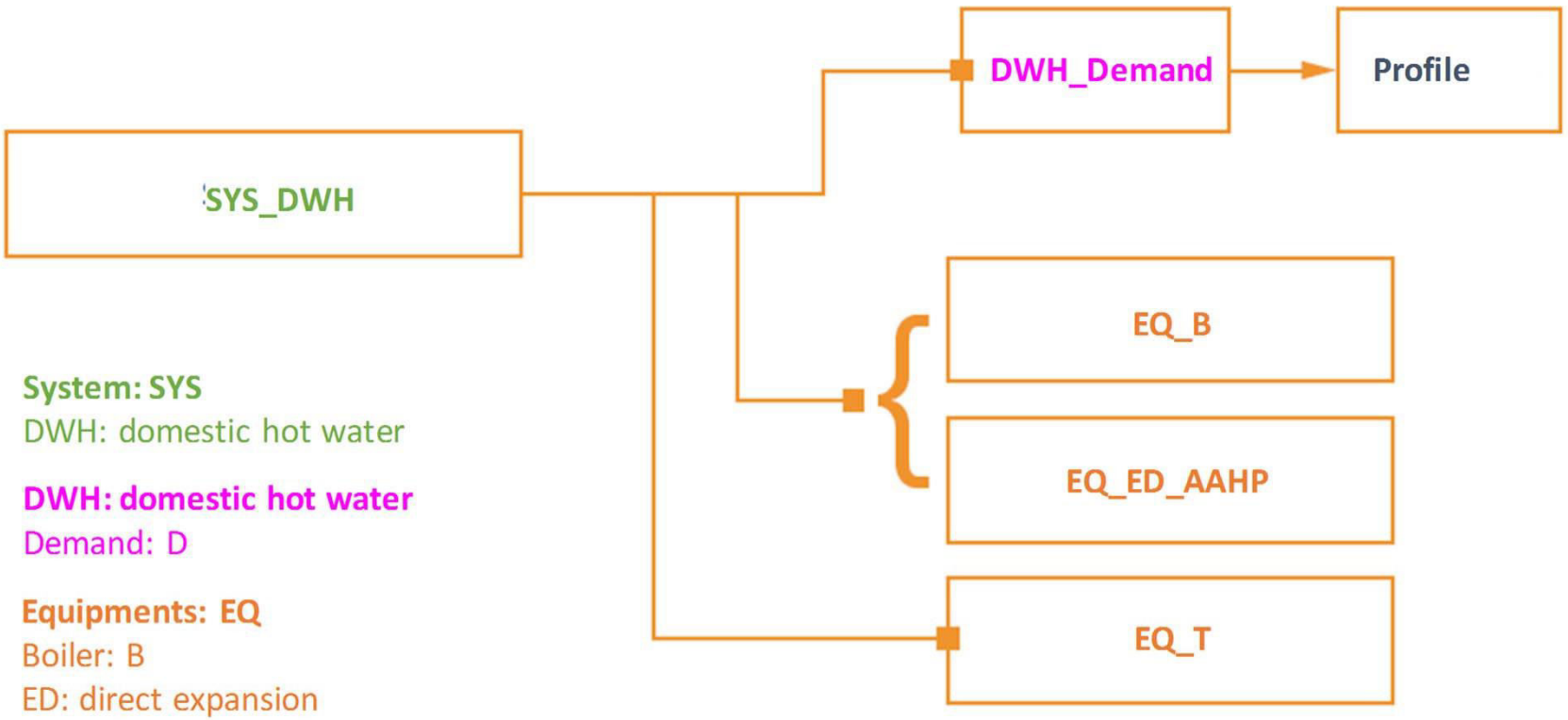

System: SYS
DWH: domestic hot water

DWH: domestic hot water
Demand: D

Equipments: EQ
Boiler: B
ED: direct expansion
Air-air heat pump: AAHP
Tank: T

3.3.2. HVAC system 1. Technical data of the boiler

- DWH system
  - Percentage covered by solar thermal system 70%
- DWH demand:
  - 2 bedrooms (3 persons); 30 l/person day
  - 90 l/day
- Boiler:
  - Fuel: natural gas
  - Nominal thermal power: 15 kW
  - Nominal thermal efficiency: 90%

3.3.2. HVAC system 1. Topology of HVAC multisplit systems

- Step 2. Define Multisplit systems

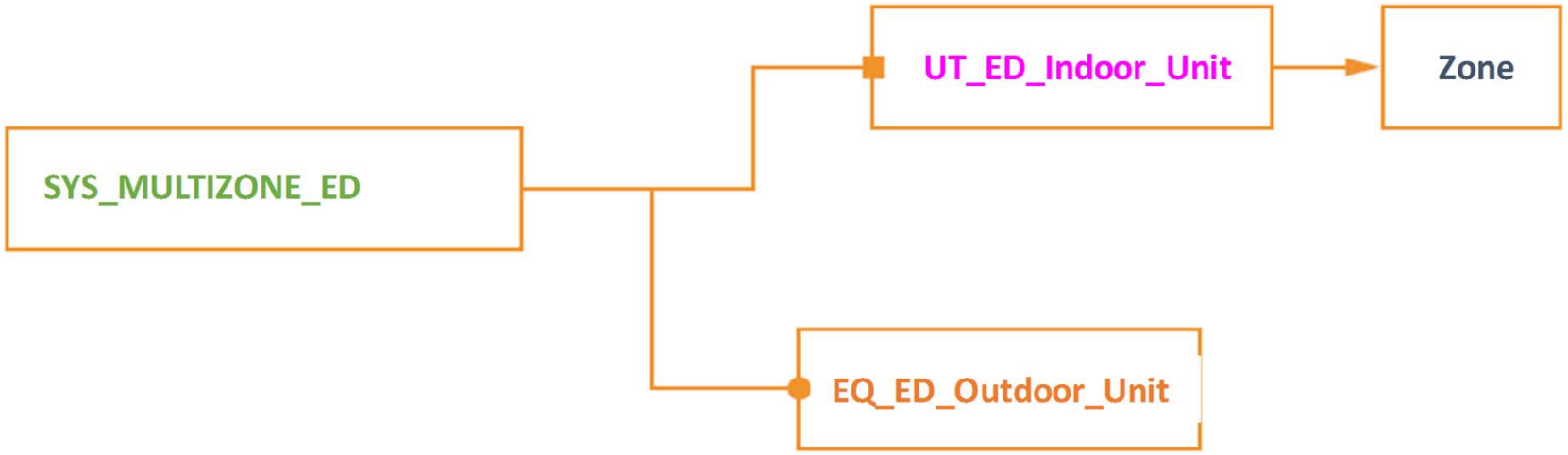

System: SYS
Direct Expansion: ED

Terminal unit: UT

Equipments: EQ
Indoor: IN
Outdoor: OU

3.3.2. HVAC system 1. Technical data of HVAC multisplit1

- Multizone direct expansión **Multisplit1** system

Indoor units		UT_P1E2	UT_P1E6	UT_P1E13	UT_P1E14
Nominal cooling capacity	kW	1	1	1	1
Nominal sensible cooling capacity	kW	0,6	0,6	0,6	0,6
Nominal heating capacity	kW	1,1	1,1	1,1	1,1
Airflow rate	m^3/h	300	300	300	300

Outdoor unit		EQ_ED_M1
Nominal cooling capacity	kW	4
Nominal cooling consumption	kW	1,5
Nominal heating capacity	kW	4,5
Nominal heating consumption	kW	1,17

3.3.2. HVAC system 1. Technical data of HVAC multisplit2

- Multizone direct expansión **Multisplit2** system

Indoor units		UT_P1E15	UT_P1E12
Nominal cooling capacity	kW	2,5	1
Nominal sensible cooling capacity	kW	1,6	0,6
Nominal heating capacity	kW	2,75	1,1
Airflow rate	m^3/h	750	300

Outdoor unit		EQ_ED_M2
Nominal cooling capacity	kW	4
Nominal cooling consumption	kW	1,5
Nominal heating capacity	kW	4,5
Nominal heating consumption	kW	1,17

3.4. Analysis of energy consumption results

3.4. Analysis of energy consumption results

- Simulate the HVAC air system in an annual base. Use the HULC software.
- Analyze the annual results in terms of energy demand, primary energy consumption and CO_2 emissions.
- Apply energy efficiency strategies to reduce energy consumption and CO_2 associated emissions.
- Simulate optimized HVAC air systems solutions and other HVAC systems proposed (see slides HVAC Workshop).
- Analyze and compare the energy results to select the best HVAC air system option.

3.4. Analysis of energy consumption results

1. Analize the energy consumption results in the residential house with different HVAC systems

2. Compare the CO_2 emissions results with different HVAC systems

3. Analize the effect of energy efficiency of the residential house respect to:
    1. Type of fuel
    2. Solar thermal coverage
    3. Hot water supply temperature forheating

4. Apply energy efficiency strategies to reduce the energy consumption

3.4. Analysis of energy consumption results

Reduce energy demand

Design building envelope:
- Thermal insulation
- Overhang design
- Windows

Passive systems:
- Trombe wall
- Ventilated Facade
- Green roofs

Time analysis energy demand

Design energy efficiency systems

Analysis energy demand/energy production:
- Zones

Analysis time-energy demand:
- Partial load analysis
- Subsystems
- Thermal storage

Reduce air/water energy transport losses:
- Thermal insulation
- Pipe/duct tightness

System selection:
- Heat exchangers
- Air-water systems
- Energy efficiency
- Control systems

Optimization of thermal processes

Heat storage:
- Great buildings

Energy recovery:
- Ventilation air recovery
- Energy transfer between building zones

Free sources of energy

Air:
- Free cooling

Wate energy:
- Cogeneration
- Domestic Hot Water
- Absortion

Renewable energy:
- Thermal Solar
- Photovoltaic
- Geothermal
- Biomass

3.4. Analysis of energy consumption results. Write your results

Test Energy Efficiency Air Systems in a residential house.

Instructions: fill the blanks of each HVAC air system corresponding to the primary energ
and CO2 emissions

a. **System 1**

A. _____ kg CO_2/m² año _____ kWh/m² año
B. _____ kg CO_2/m² año _____ kWh/m² año
C. _____ kg CO_2/m² año _____ kWh/m² año
D. _____ kg CO_2/m² año _____ kWh/m² año
E. _____ kg CO_2/m² año _____ kWh/m² año

b. **System 2**

A. _____ kg CO_2/m² año _____ kWh/m² año
B. _____ kg CO_2/m² año _____ kWh/m² año
C. _____ kg CO_2/m² año _____ kWh/m² año
D. _____ kg CO_2/m² año _____ kWh/m² año
E. _____ kg CO_2/m² año _____ kWh/m² año

c. **System 3**

A. _____ kg CO_2/m² año _____ kWh/m² año
B. _____ kg CO_2/m² año _____ kWh/m² año
C. _____ kg CO_2/m² año _____ kWh/m² año
D. _____ kg CO_2/m² año _____ kWh/m² año
E. _____ kg CO_2/m² año _____ kWh/m² año

d. **System 4**

A. _____ kg CO_2/m² año _____ kWh/m² año
B. _____ kg CO_2/m² año _____ kWh/m² año
C. _____ kg CO_2/m² año _____ kWh/m² año
D. _____ kg CO_2/m² año _____ kWh/m² año
E. _____ kg CO_2/m² año _____ kWh/m² año

e. **Improved energy efficiency system**

A. _____ kg CO_2/m² año _____ kWh/m² año
B. _____ kg CO_2/m² año _____ kWh/m² año
C. _____ kg CO_2/m² año _____ kWh/m² año
D. _____ kg CO_2/m² año _____ kWh/m² año
E. _____ kg CO_2/m² año _____ kWh/m² año

References

References

- HULC, Herramienta Unificada LIDER CALENER
  - http://www.codigotecnico.org/index.php/herramienta-unificada-lider-calener/index.php/es/menu-recursos/menu-aplicaciones/282-herramienta-unificada-lider-calener
- HULC User manual. Herramienta Unificada LIDER CALENER
  - http://www.codigotecnico.org/images/stories/pdf/aplicaciones/lider-calener/ManualDeUsuarioHULC-20151221.pdf

Herramienta Unificada
LIDER - CALENER

Herramienta Unificada para la Verificación del Documento Básico HE del CTE y la Certificación Energética de Edificios

IDAE

HERRAMIENTA UNIFICADA LIDER-CALENER

Manual de Usuario

UNIVERSIDAD DE CORDOBA

Materials prepared by:

Manuel Ruiz de Adana

VIPSKILLS

Erasmus+

EN	This project has been funded with support from the European Commission. This publication [communication] reflects the views only of the author, and the Commission cannot be held responsible for any use which may be made of the information contained therein.
PL	Publikacja została zrealizowana przy wsparciu finansowym Komisji Europejskiej. Publikacja odzwierciedla jedynie stanowisko jej autorów i Komisja Europejska oraz Narodowa Agencja Programu Erasmus+ nie ponoszą odpowiedzialności za jej zawartość merytoryczną.
ES	El presente proyecto ha sido financiado con el apoyo de la Comisión Europea. Esta publicación (comunicación) es responsabilidad exclusiva de su autor. La Comisión no es responsable del uso que pueda hacerse de la información aquí difundida.
LT	Šis projektas finansuojamas remiant Europos Komisijai. Šis leidinys [pranešimas] atspindi tik autoriaus požiūrį, todėl Komisija negali būti laikoma atsakinga už bet kokį jame pateikiamos informacijos naudojimą.

Contact

VIPSKILLS Project Coordinator:

vipskills[at]pb.edu.pl

Virtual and Intensive Course Developing Practical Skills of Future Engineers

VIPSKILLS

Erasmus+ 2016-1-PL01-KA203-026152

Virtual and Intensive Course Developing

Practical Skills of Future Engineers

www.vipskills.pb.edu.pl